YUANG LIGHT

# LED Balloon Light Series

# Mobile Lighting Tower Series

© Copyright 2020 – Ching Yuang Enterprise Co. Ltd.

YUANG
LIGHT

by Ching Yuang

**Yuang Light** is a series of portable LED lights suited to a wide range of industrial, construction and outdoor uses. Our comprehensive lighting systems are developed for ease of use and maximum portability, while our LED technology ensures that our lights have long life expectancy and are bright enough for any application, while minimizing power consumption.

**Yuang Light** was created by **Ching Yuang** in 2013. **Ching Yuang** was established in 2002 as a manufacturer of high watt LED lighting, ventilation systems (blowers) and spot coolers. All of our products are made to the highest standards in Taiwan. In 2013, **Ching Yuang** released our own range of products, Yuang Light and Yuang Tools. The quality of our products is known worldwide and our customers can be found in Japan, South East Asia, the Middle East, the United States and Europe. Our close relationship with our customers has provided invaluable feedback that has allowed us to develop exceptional products.

**Ching Yuang** believes that our customers' success is also our success, and so we are always striving to design the best product for the problem at hand.

ISO
9001 : 2015
CERTIFIED

# LED Balloon Light

System

50 W
100 W
200 W
300 W
500 W
960 W

# TINY LED Balloon Light

**50** W

Our TINY LED BALLOON LIGHTS are the most compact and portable in our collection. While these family friendly lights aren't as powerful as their bigger cousins, they emit more than enough for everyday activities. And since they are dimmable, you can always set them to just the right brightness, whether you're cooking, reading, dining or just enjoying the great outdoors.

Family Friendly · Extra Lightweight · Portable · Dimmable · Easy Setup · Glare-Free · 360° Illumination · Diffused Light

High Efficiency 150 lm/W · Life Span > 50,000 hrs · Low-Maintenance · Waterproof

## DIMENSIONS

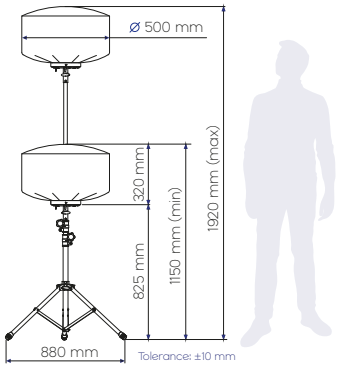


## TECHNICAL DATA — 50 W

| | | |
|---|---|---|
| General | Voltage | AC 100-240 V |
| | Frequency | 50/60 Hz |
| | Operating Amperage | 0.6 A |
| | Power Consumption (±5%) | 55 W |
| | Lamp+Tripod | 5.6 kg |
| Lamp | Panel Power Consumption (±5%) | 45 W |
| | Panel Luminous Flux (±10%) | 8,000 lm |
| | Correlated Color Temperature | 5,000 K |
| | Width | 500 mm |
| | Height | 320 mm |
| | Weight | 3 kg |
| Tripod | Height (min-max) | 825-1600 mm |
| | Weight | 2.6 kg |
| | Collapsed Height | 770 mm |
| | Collapsed Width | 120 mm |

## LIGHTING DATA

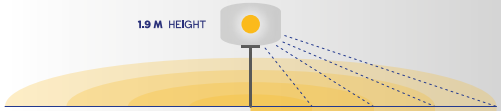


**50** W
**0°** PANEL ANGLE
**OMNI** COVER

| | | | | |
|---|---|---|---|---|
| Distance | 1 m | 4 m | 8 m | 13 m |
| Area | 3 m² | 50 m² | 200 m² | 490 m² |
| Lux | 102 | 13 | 3 | 0.5 |

More data on **page 22**.

## ACCESSORIES

The TINY LED Balloon Light standard package includes:

- LED light system
- Omni light cover
- Small tripod
- Light carry bag
- Tripod carry bag

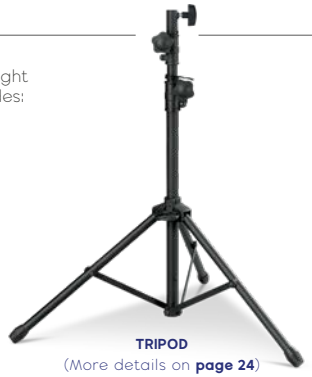

**TRIPOD**
(More details on **page 24**)

**LIGHT CARRY BAG**

**TRIPOD CARRY BAG**

## CUSTOMIZATION

The TINY LED Balloon Light can also be mounted on a trolley and customized with a different light cover, for more info, please see **page 20**.

# MINI LED Balloon Light

100 W | 200 W

Our MINI LED Balloon Lights emit bright, diffused light that is suitable for indoor spaces and outdoor events. Released in 100 W and 200 W versions, they can be used to light up film sets, provide even lighting for studio photography and interior construction, and general portable lighting for outdoor activities like camping, sporting events and parties.

Lightweight | Portable | Easy Setup | Glare-Free | 360° Illumination | Diffused Light | High Efficiency 150 lm/W | Life Span > 50,000 hrs | Low-Maintenance | Waterproof

## DIMENSIONS

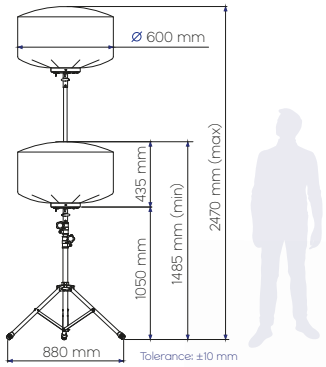


## TECHNICAL DATA

| | | 100 W | 200 W |
|---|---|---|---|
| General | Voltage | AC 100-240 V | AC 100-240 V |
| | Frequency | 50/60 Hz | 50/60 Hz |
| | Operating Amperage | 1.2 A | 2.3 A |
| | Power Consumption (±5%) | 110 W | 210 W |
| | Lamp+Tripod | 8.2 kg | 8.2 kg |
| Lamp | Panel Power Consumption (±5%) | 90 W | 180 W |
| | Panel Luminous Flux (±10%) | 15,600 lm | 28,000 lm |
| | Correlated Color Temperature | 5,000 K | 5,000 K |
| | Width | 600 mm | 600 mm |
| | Height | 435 mm | 435 mm |
| | Weight | 5 kg | 5 kg |
| Tripod | Height (min-max) | 1050-2035 mm | 1050-2035 mm |
| | Weight | 3.2 kg | 3.2 kg |
| | Collapsed Height | 930 mm | 930 mm |
| | Collapsed Width | 120 mm | 120 mm |

## LIGHTING DATA

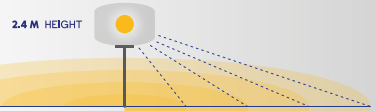


| | | | | | |
|---|---|---|---|---|---|
| 100 W, 0° PANEL ANGLE, OMNI COVER | Distance | 1 m | 4 m | 8 m | 14 m |
| | Area | 3 m² | 50 m² | 200 m² | 615 m² |
| | Lux | 150 | 30 | 8 | 0.5 |
| 200 W, 0° PANEL ANGLE, OMNI COVER | Distance | 1 m | 4 m | 8 m | 19 m |
| | Area | 3 m² | 50 m² | 200 m² | 1135 m² |
| | Lux | 247 | 48 | 11 | 0.5 |

More data on **page 22**.

## ACCESSORIES

The MINI LED Balloon Light standard package includes:

- LED light system
- Omni light cover
- Small tripod
- Light carry bag
- Tripod carry bag

TRIPOD
(More details on **page 24**)

LIGHT CARRY BAG

TRIPOD CARRY BAG

## CUSTOMIZATION

The MINI LED Balloon Light can also be mounted on a trolley and customized with a different light cover, for more info, please see **page 20**.

# MIDI LED Balloon Light

300 W

Our MIDI LED Balloon Lights emit light that is close to sunlight. They are best for situations where no-nonsense lighting is essential for safety and practicality. They can be used for rescue operations, tunneling and for oil and gas exploration, outdoor construction and on large film sets.

Portable · Easy Setup · Glare-Free · 360° Illumination · Diffused Light · High Efficiency 150 lm/W · Life Span > 50,000 hrs · Low-Maintenance · Waterproof

## DIMENSIONS

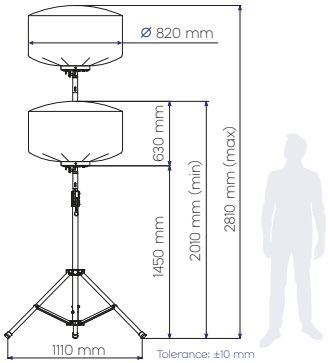


## TECHNICAL DATA — 300 W

| | | |
|---|---|---|
| General | Voltage | AC 100-240 V |
| | Frequency | 50/60 Hz |
| | Operating Amperage | 1.9 A/3.5 A |
| | Power Consumption (±5%) | 155 W/310 W |
| | Lamp+Tripod | 15.6 kg |
| Lamp | Panel Power Consumption (±5%) | 135 W/270 W |
| | Panel Luminous Flux (±10%) | 21,000 lm/42,000 lm |
| | Correlated Color Temperature | 5,000 K |
| | Width | 820 mm |
| | Height | 630 mm |
| | Weight | 8.5 kg |
| Tripod | Height (min-max) | 1450-2180 mm |
| | Weight | 7.1 kg |
| | Collapsed Height | 1340 mm |
| | Collapsed Width | 180 mm |

## LIGHTING DATA

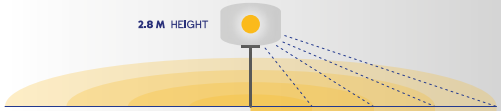


300 W
0° PANEL ANGLE
OMNI COVER

| | | | | |
|---|---|---|---|---|
| Distance | 1 m | 4 m | 8 m | 21 m |
| Area | 3 m² | 50 m² | 200 m² | 1385 m² |
| Full Light | 356 lx | 80 lx | 18 lx | 0.5 lx |
| Half Light | 180 lx | 40 lx | 10 lx | 0.5 lx |

More data on **page 22**.

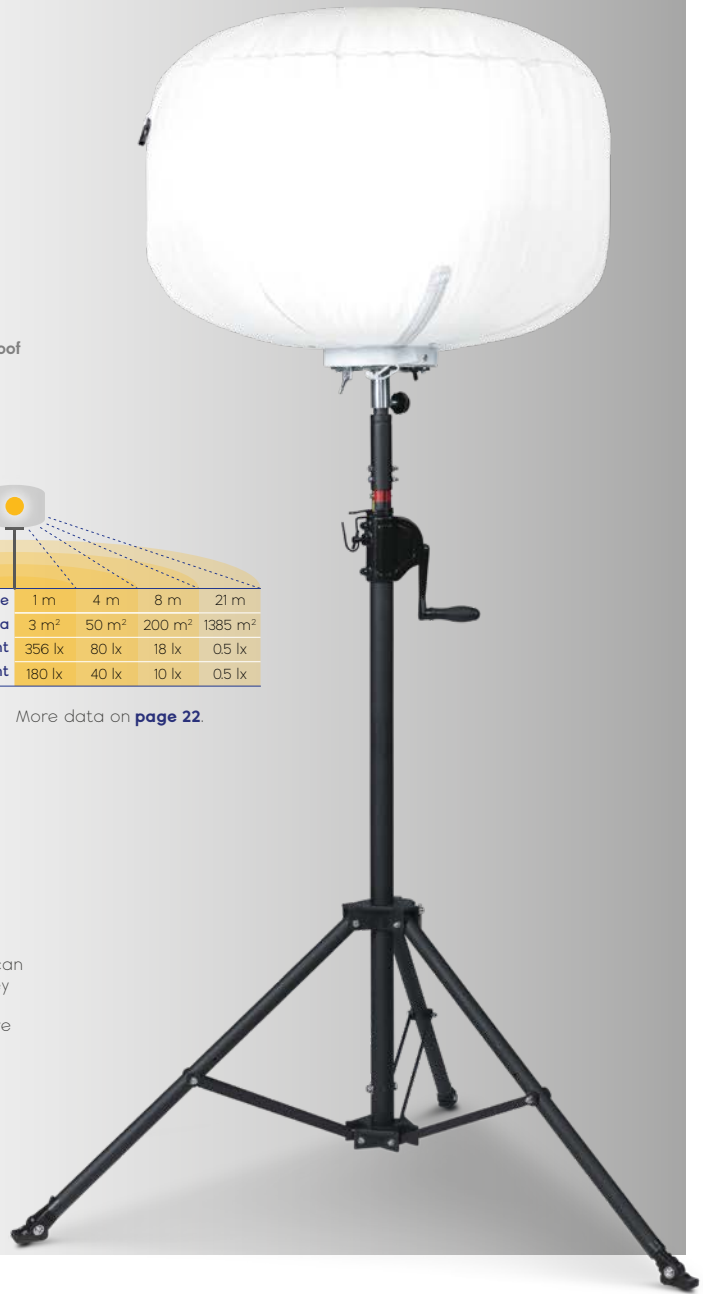

## ACCESSORIES

The MIDI LED Balloon Light standard package includes:

- LED light system
- Omni light cover
- Medium tripod
- Light carry bag
- Tripod carry bag

TRIPOD
(More details on **page 24**)

LIGHT CARRY BAG

TRIPOD CARRY BAG

## CUSTOMIZATION

The MIDI LED Balloon Light can also be mounted on a trolley and customized with a different light cover, for more info, please see **page 20**.

# MAXI LED Balloon Light

500 W | 960 W

Our MAXI LED Balloon Lights are the brightest in our collection and come in 500 W and 960 W versions. Their wide coverage make them essential for large-scale infrastructure projects like roadworks and construction projects, and they provide ample lighting at sporting events. Their easy setup and portability make them invaluable in fire-fighting and other disaster relief situations.

Portable | Easy Setup | Glare-Free | 360° Illumination | Diffused Light | High Efficiency 150 lm/W | Life Span > 50,000 hrs | Waterproof

## DIMENSIONS

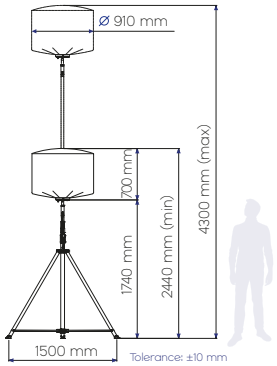


## TECHNICAL DATA

| | | 500 W | 960 W |
|---|---|---|---|
| General | Voltage | AC 100-240 V | AC 100-240 V |
| | Frequency | 50/60 Hz | 50/60 Hz |
| | Operating Amperage | 2.9 A/5.5 A | 5.3 A/10.6 A |
| | Power Consumption (±5%) | 245 W/490 W | 485 W/970 W |
| | Lamp+Tripod | 32 kg | 37 kg |
| Lamp | Panel Power Consumption (±5%) | 216 W/432 W | 432 W/864 W |
| | Panel Luminous Flux (±10%) | 36,000 lm/72,000 lm | 72,000 lm/145,000 lm |
| | Correlated Color Temperature | 5,000 K | 5,000 K |
| | Width | 910 mm | 910 mm |
| | Height | 700 mm | 700 mm |
| | Weight | 14.5 kg | 17.5 kg |
| Tripod | Height (min-max) | 1740-3700 mm | 1740-3700 mm |
| | Weight | 17.5 kg | 19.5 kg |
| | Collapsed Height | 1980 mm | 1980 mm |
| | Collapsed Width | 210 mm | 210 mm |

## LIGHTING DATA

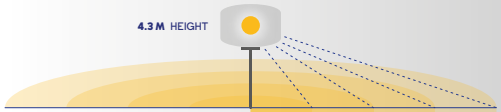


| | | | | | |
|---|---|---|---|---|---|
| 500 W, 0° PANEL ANGLE, OMNI COVER | Distance | 1 m | 4 m | 8 m | 32 m |
| | Area | 3 m² | 50 m² | 200 m² | 3215 m² |
| | Full Light | 175 lx | 70 lx | 20 lx | 0.5 lx |
| | Half Light | 85 lx | 35 lx | 10 lx | 0.5 lx |
| 960 W, 0° PANEL ANGLE, OMNI COVER | Distance | 1 m | 4 m | 8 m | 41 m |
| | Area | 3 m² | 50 m² | 200 m² | 5278 m² |
| | Full Light | 350 lx | 140 lx | 40 lx | 0.5 lx |
| | Half Light | 175 lx | 70 lx | 20 lx | 0.5 lx |

More data on **page 22**.

## ACCESSORIES

The MAXI LED Balloon Light standard package includes:

- LED light system
- Omni light cover
- Large tripod
- Light carry bag
- Tripod carry bag

TRIPOD
(More details on **page 24**)

LIGHT CARRY BAG

TRIPOD CARRY BAG

## CUSTOMIZATION

The MAXI LED Balloon Light can also be mounted on a trolley and customized with a different light cover, for more info, please see **page 20**.

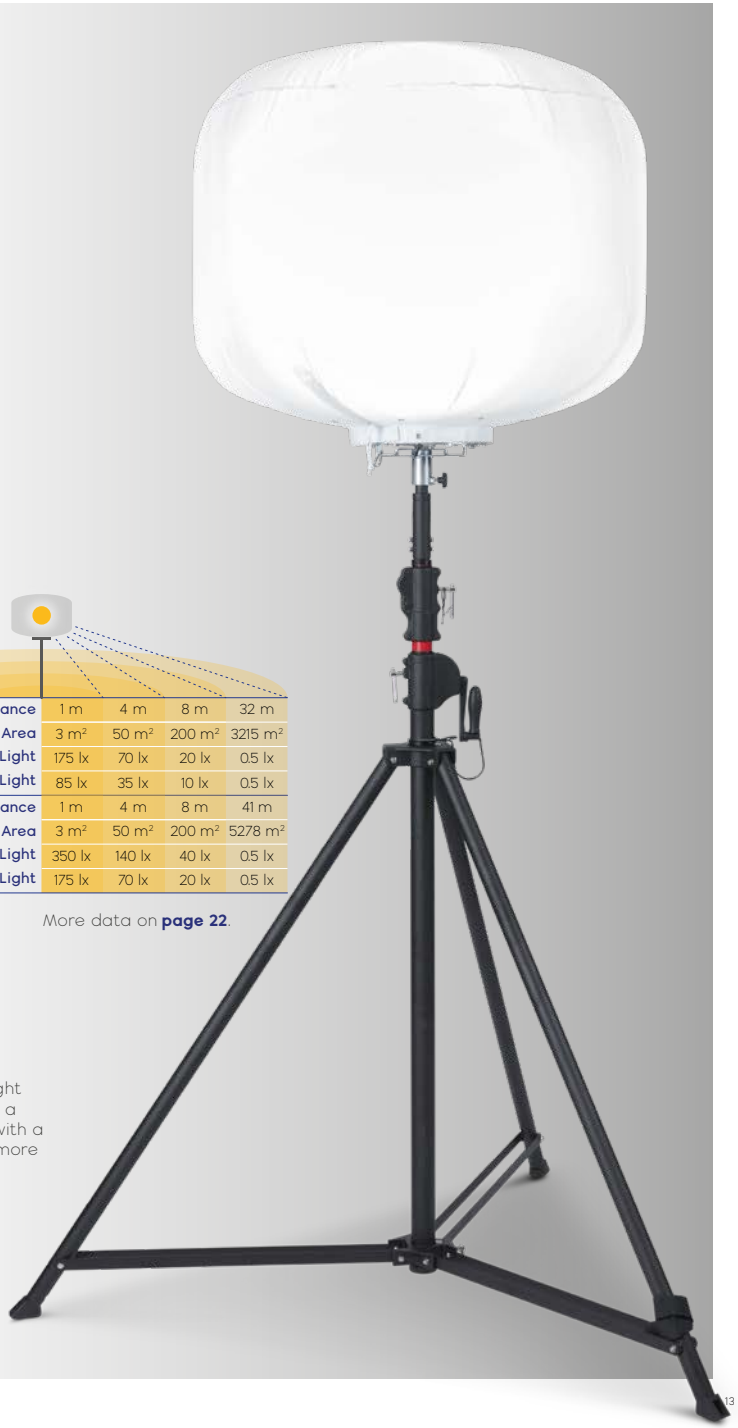

# LED Balloon Light System

## Comparison Table

| | | TINY | MINI | | MIDI | MAXI | |
|---|---|---|---|---|---|---|---|
| | | 50 W | 100 W | 200 W | 300 W | 500 W | 960 W |
| **GENERAL** | Voltage | AC 100-240 V | AC 100-240 V | AC 100-240 V | AC 100-240 V | AC 100-240 V | AC 100-240 V |
| | Frequency | 50/60 Hz | 50/60 Hz | 50/60 Hz | 50/60 Hz | 50/60 Hz | 50/60 Hz |
| | Operating Amperage | 0.62 A | 1.2 A | 2.3 A | 1.9 A/3.5 A | 2.9 A/5.5 A | 5.3 A/10.6 A |
| **LAMP** | Power Consumption (±5%) | 55 W | 110 W | 210 W | 155 W (half) / 310 W (full) | 245 W (half) / 490 W (full) | 485 W (half) / 970 W (full) |
| | Panel Power Consumption (±5%) | 45 W | 90 W | 180 W | 130 W (half) / 270 W (full) | 216 W (half) / 432 W (full) | 432W (half) / 864 W (full) |
| | Average Lamp Life | > 50,000 hrs | > 50,000 hrs | > 50,000 hrs | > 50,000 hrs | > 50,000 hrs | > 50,000 hrs |
| | Color Rendering Index | 80 | 80 | 80 | 80 | 80 | 80 |
| | Correlated Color Temperature | 5,000 K | 5,000 K | 5,000 K | 5,000 K | 5,000 K | 5,000 K |
| | Luminous Flux (±10%) | 8,000 lm | 15,600 lm | 28,000 lm | 21,000 lm (half) / 42,000 lm (full) | 36,000 lm (half) / 72,000 lm (full) | 72,000 lm (half) / 145,000 lm (full) |
| | Width | 500 mm | 600 mm | 600 mm | 820 mm | 910 mm | 910 mm |
| | Height | 320 mm | 435 mm | 435 mm | 630 mm | 700 mm | 700 mm |
| | Weight | 3 kg | 5 kg | 5 kg | 8.5 kg | 14.5 kg | 19.5 kg |
| **TRIPOD** | Height (min-max) | 825-1600 mm | 1050-2035 mm | 1050-2035 mm | 1450-2180 mm | 1740-3700 mm | 1740-3700 mm |
| | Collapsed Height | 770 mm | 930 mm | 930 mm | 1340 mm | 1980 mm | 1980 mm |
| | Collapsed Width | 120 mm | 120 mm | 120 mm | 180 mm | 210 mm | 210 mm |
| | Weight | 2.6 kg | 3.2 kg | 3.2 kg | 7.1 kg | 17.5 kg | 17.5 kg |
| **TROLLEY** | Height | 720 mm | 720 mm | 720 mm | 690 mm | 690 mm | 1755 mm |
| | Length | 730 mm | 730 mm | 730 mm | 1060 mm | 1060 mm | 1360 mm |
| | Width | 430 mm | 430 mm | 430 mm | 800 mm | 800 mm | 880 mm |
| | Weight | 16 kg | 16 kg | 16 kg | 26 kg | 26 kg | 135 kg |
| **WEIGHT** | Lamp + Tripod | 6 kg | 8.2 kg | 8.2 kg | 15.6 kg | 32 kg | 37 kg |
| | Lamp + Trolley | 19 kg | 21 kg | 21 kg | 34.5 kg | 40.5 kg | 154.5 kg |

Dimensions tolerance: ±10 mm

As part of our continuous efforts to improve our products, features and specifications may change without notice.

# Mobile Lighting Tower

## System

**SINGLE 250** W
**TWIN 500** W

Mobile Lighting Tower

# SINGLE 250 W
# TWIN 500 W

Our ultra bright Mobile Lighting Towers emit undiffused, directional light that is essential for construction. They are mobile and exceptionally easy to setup and operate. Their durability and reliability mean they will last on the roughest of sites, and as an added bonus are good for the environment.

Ultra Bright | Lightweight | Directional | Waterproof | Steel Mesh Protector | Low-Power Consumption

## DIMENSIONS

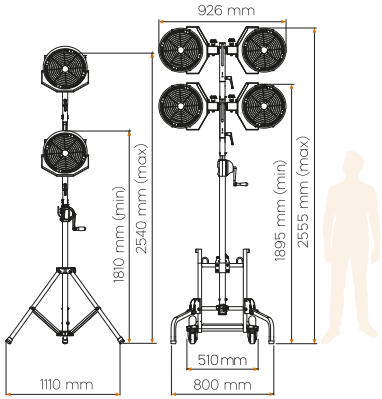


Tolerance: ±10 mm

250 W | 500 W

## TECHNICAL DATA

| | | 250 W | 500 W |
|---|---|---|---|
| General | Voltage | AC 100-240 V | AC 100-240 V |
| | Frequency | 50/60 Hz | 50/60 Hz |
| | Operating Amperage | 3 A | 6 A |
| Lamp | Power Consumption (±5%) | 250 W | 500 W |
| | Average Lamp Life | > 50,000 hrs | > 50,000 hrs |
| | CRI | 80 | 80 |
| | CCT | 5,000 K | 5,000 K |
| | Luminous Flux (±10%) | 42,000 lm | 84,000 lm |
| | Width | 330 mm | 910 mm |
| | Height | 415 mm | 400 mm |
| | Weight | 7.6 kg | 16.4 kg |
| Tripod | Height (min-max) | 1450-2180 mm | – |
| | Collapsed Height | 1340 mm | – |
| | Collapsed Width | 180 mm | – |
| | Weight | 7.1 kg | – |
| Trolley | Height | – | 690 mm |
| | Length | – | 1060 mm |
| | Width | – | 800 mm |
| | Weight | – | 21 kg |

## LIGHTING DATA

| | | | | |
|---|---|---|---|---|
| 250 W | Distance | 1 m | 5 m | 10 m |
| | Area | 9 m² | 65 m² | 50 m² |
| | Lux | 592 | 156 | 22 |
| 500 W | Distance | 1 m | 5 m | 10 m |
| | Area | 9 m² | 75 m² | 120 m² |
| | Lux | 1160 | 304 | 45 |

# Accessories

LIGHT COVERS
TRIPODS
TROLLEYS

## Accessories

# LIGHT COVERS

OMNI REFLECTIVE

The covers for our LED Balloon Light inflate into an elegant and efficient balloon shape with air from the fans. We offer two different standard covers; the Omni Light Cover and the Reflective Light Cover. Designed to be used with our LED lighting systems, they are easy to attach and hold their shape perfectly.

Omni-directional/ Reflective

Waterproof

Flameproof

Phenolic Yellowing Resistant

Washable

## OMNI

Our Omni Light Covers produce omni-directional, even lighting throughout a space. The covers are washable, easily replaced, waterproof, tear and flameproof. They are ideal for covered spaces.

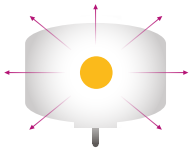

**MINI** 600 x 435 mm
**MIDI** 820 x 630 mm
**MAXI** 910 x 700 mm

## REFLECTIVE

Our Reflective Light Covers reflect light down onto the ground, acting as highly efficient street lights. The covers are washable, easily replaced, waterproof and flameproof. They are ideal for open-air applications.

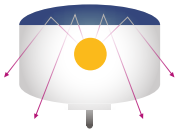

**MINI** 600 x 435 mm
**MIDI** 820 x 630 mm
**MAXI** 910 x 700 mm

### OMNI LIGHTING DATA

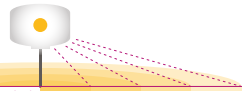

| | | | | | |
|---|---|---|---|---|---|
| 50 W, 0° PANEL ANGLE AT 1.9 M HEIGHT | Distance (m) | 1 | 4 | 8 | 14 |
| | Area (m²) | 3 | 50 | 200 | 490 |
| | Lux (lx) | 102 | 13 | 3 | 0.5 |
| 100 W, 0° PANEL ANGLE AT 2.4 M HEIGHT | Distance (m) | 1 | 4 | 8 | 14 |
| | Area (m²) | 3 | 50 | 200 | 615 |
| | Lux (lx) | 150 | 30 | 8 | 0.5 |
| 200 W, 0° PANEL ANGLE AT 2.4 M HEIGHT | Distance (m) | 1 | 4 | 8 | 19 |
| | Area (m²) | 3 | 50 | 200 | 1135 |
| | Lux (lx) | 247 | 48 | 11 | 0.5 |
| 300 W, 0° PANEL ANGLE AT 2.8 M HEIGHT | Distance (m) | 1 | 4 | 8 | 21 |
| | Area (m²) | 3 | 50 | 200 | 1385 |
| | Full Light (lx) | 356 | 80 | 18 | 0.5 |
| | Half Light (lx) | 180 | 40 | 10 | 0.5 |
| 500 W, 0° PANEL ANGLE AT 4.3 M HEIGHT | Distance (m) | 1 | 4 | 8 | 32 |
| | Area (m²) | 3 | 50 | 200 | 3215 |
| | Full Light (lx) | 175 | 70 | 20 | 0.5 |
| | Half Light (lx) | 85 | 35 | 10 | 0.5 |
| 960 W, 0° PANEL ANGLE AT 4.3 M HEIGHT | Distance (m) | 1 | 4 m | 8 | 41 |
| | Area (m²) | 3 | 50 | 200 | 5278 |
| | Full Light (lx) | 350 | 140 | 40 | 0.5 |
| | Half Light (lx) | 175 | 70 | 20 | 0.5 |

### REFLECTIVE LIGHTING DATA

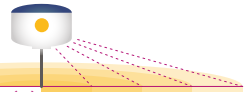

| | | | | | |
|---|---|---|---|---|---|
| 100 W, 0° PANEL ANGLE AT 2.4 M HEIGHT | Distance (m) | 1 | 4 | 8 | 14 |
| | Area (m²) | 3 | 50 | 200 | 615 |
| | Lux (lx) | 197 | 34 | 8 | 0.5 |
| 200 W, 0° PANEL ANGLE AT 2.4M HEIGHT | Distance (m) | 1 | 4 | 8 | 19 |
| | Area (m²) | 3 | 50 | 200 | 1135 |
| | Lux (lx) | 328 | 53 | 10 | 0.5 |
| 300 W, 0° PANEL ANGLE AT 2.8 M HEIGHT | Distance (m) | 1 | 4 | 8 | 21 |
| | Area (m²) | 3 | 50 | 200 | 1385 |
| | Full Light (lx) | 531 | 85 | 20 | 0.5 |
| | Half Light (lx) | 309 | 47 | 10 | 0.5 |
| 500 W, 0° PANEL ANGLE AT 4.3 M HEIGHT | Distance (m) | 1 | 4 | 8 | 32 |
| | Area (m²) | 3 | 50 | 200 | 3215 |
| | Full Light (lx) | 210 | 80 | 20 | 0.5 |
| | Half Light (lx) | 100 | 40 | 10 | 0.5 |
| 960 W, 0° PANEL ANGLE AT 4.3 M HEIGHT | Distance (m) | 1 | 4 | 8 | 41 |
| | Area (m²) | 3 | 50 | 200 | 5278 |
| | Full Light (lx) | 470 | 145 | 40 | 0.5 |
| | Half Light (lx) | 235 | 72 | 20 | 0.5 |



for

**LED Balloon Light**

System

LIGHT COVER CUSTOMIZATION

OMNI

REFLECTIVE

## Accessories

# TRIPODS

X SMALL | SMALL | MEDIUM | LARGE

Our tripods are designed to integrate seamlessly into our lighting systems. Compact and reliable, they are a breeze to carry and collapse easily for storage. They can extend from a height of 1 meter to 4 meters. Safety features include a safety-chain to prevent accidental disconnection as well as a T-knob for extra safety. Tripods include a system for power cord storage and leg fasteners for safe transportation.

**The color and structure of our tripods can be customized.**
Dimension tolerance: ±10 mm

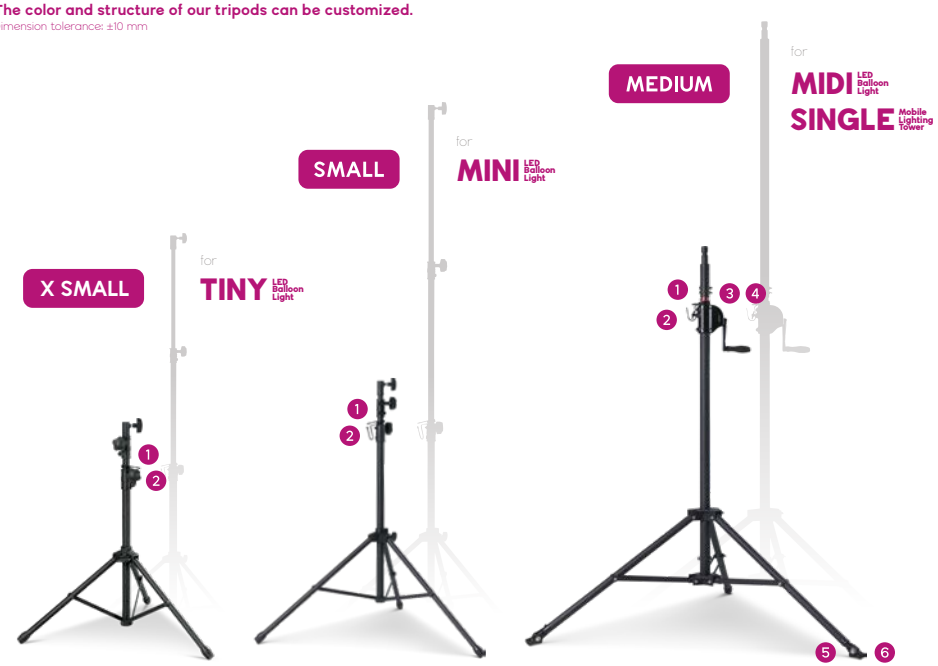


| | X SMALL (TINY) | SMALL (MINI) | MEDIUM (MIDI SINGLE) |
|---|---|---|---|
| Height (min-max) | 825-1600 mm | 1050-2035 mm | 1450-2180 mm |
| Width | 880 mm | 880 mm | 1110 mm |
| Weight | 3 kg | 3.2 kg | 7.1 kg |
| Collapsed Height | 770 mm | 930 mm | 1340 mm |
| Collapsed Width | 120 mm | 120 mm | 180 mm |

Cable Hook + Storage

Integrated Ruler

Safety Chain

Anchor Holes

Articulated Feet



for

**LED Balloon Light** System

**Mobile Lighting Tower** System

LARGE

for
**MAXI** LED Balloon Light

| | |
|---|---|
| Height (min-max) | 1740-3700 mm |
| Width | 1500 mm |
| Weight | 17.5 kg |
| Collapsed Height | 1980 mm |
| Collapsed Width | 210 mm |

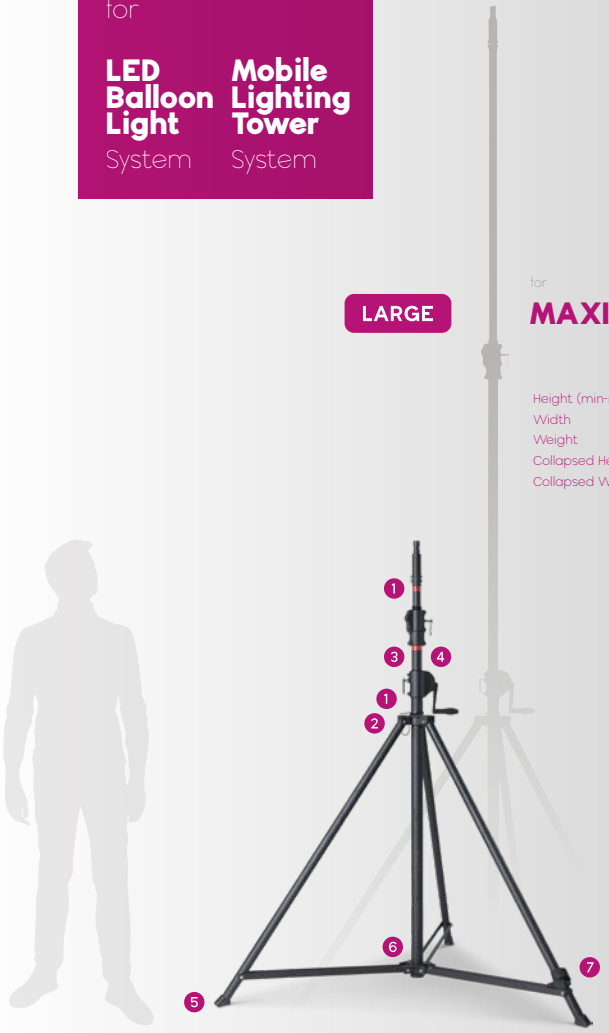

Cable Hook

Cable Hook Cable Storage

Maximum Height Red Mark

Safety Chain

Anchor Holes

Security T-Knob

Cable Velcro

## Accessories

# TROLLEYS

SMALL MEDIUM LARGE

for

**LED Balloon Light** System

**Mobile Lighting Tower** System

Our trolleys are the perfect size to transport generators. Made from strong steel with four sturdy wheels, they are as mobile as they are robust. Packed full of safety features, our trolleys make moving lights a breeze.

**The color and structure of our trolleys can be customized.**

SMALL

for

**TINY** LED Balloon Light

**MINI** LED Balloon Light

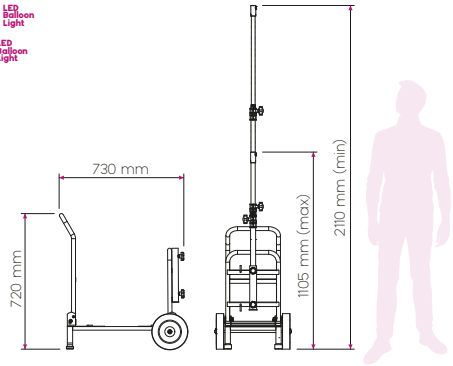


Generator/Battery Compartiment: L 56 x W 32 x D 50 cm

Weight: 16 kg

Dimension tolerance: ±10 mm



MEDIUM

for

**MIDI** LED Balloon Light

**MAXI** LED Balloon Light 500 W

**TWIN** Mobile Lighting Tower

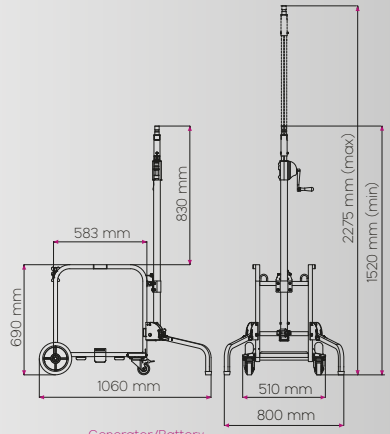


Generator/Battery Compartiment: L 50 x W 30 x D 50 cm

Weight: 26 kg

Stackable

Adjustable Stabilizer Legs

Fail-Safe Lock

Generator Safety Belt

Crane-Hook Hole

Rubber Swivel & Brake Wheels

LARGE

for

**MAXI TWIN** LED Balloon Light Mobile Lighting Tower

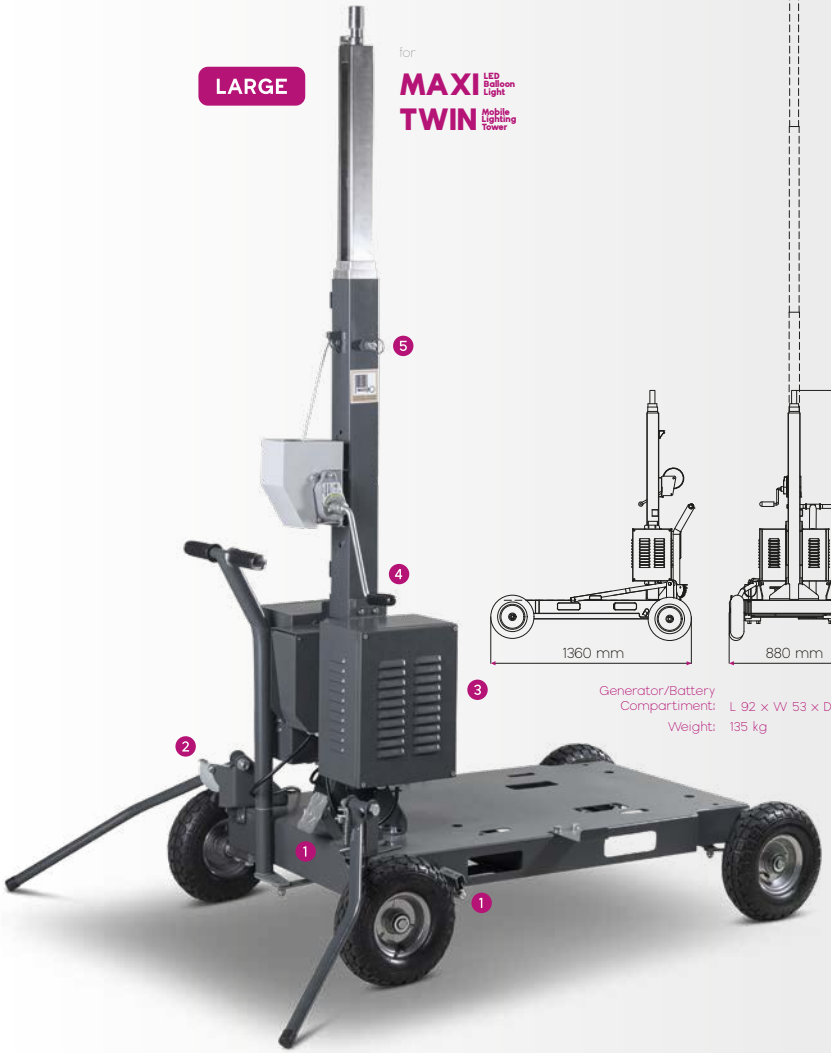


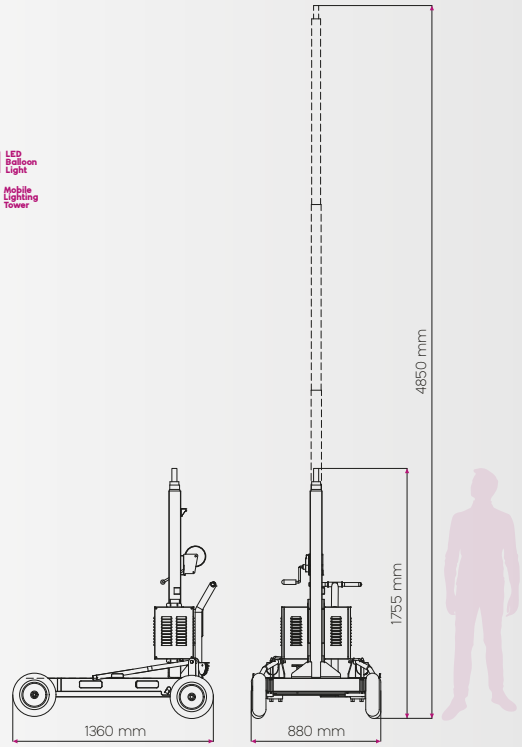


Generator/Battery Compartiment: L 92 × W 53 × D 65 cm
Weight: 135 kg

Brake Pedal

Adjustable Stabilizer Legs

Compartiment

Telescopic Pole Crank

Telescopic Pole Safety Pin

# LED Lights Customization Possibilities

RGB Colors | Fog Light | Timer | Custom Temperature | Dimmer | Remote Control | ... and more!

Our lights can be customized to allow their color to be adjusted across the **RGB** spectrum or converted to **fog lights**. In addition, a **timer** can set how many seconds different colors display. Lights can also be **customized to a specific color** for purposes like emergency or security lights. **Dimmers** controlled by manual or **remote control** switches can also be installed

The shape of our light covers can be customized, as can the color and structure of our trolleys and tripods.

- Light color adjustable across the RGB spectrum
- Set correlated color temperature between 2500 K and 6500 K
- Switch between fog and white light
- Dim light manually or by remote control
- Set timer to change colors between interval
- Use remote to control timer, dimmer and turn lights on and off.

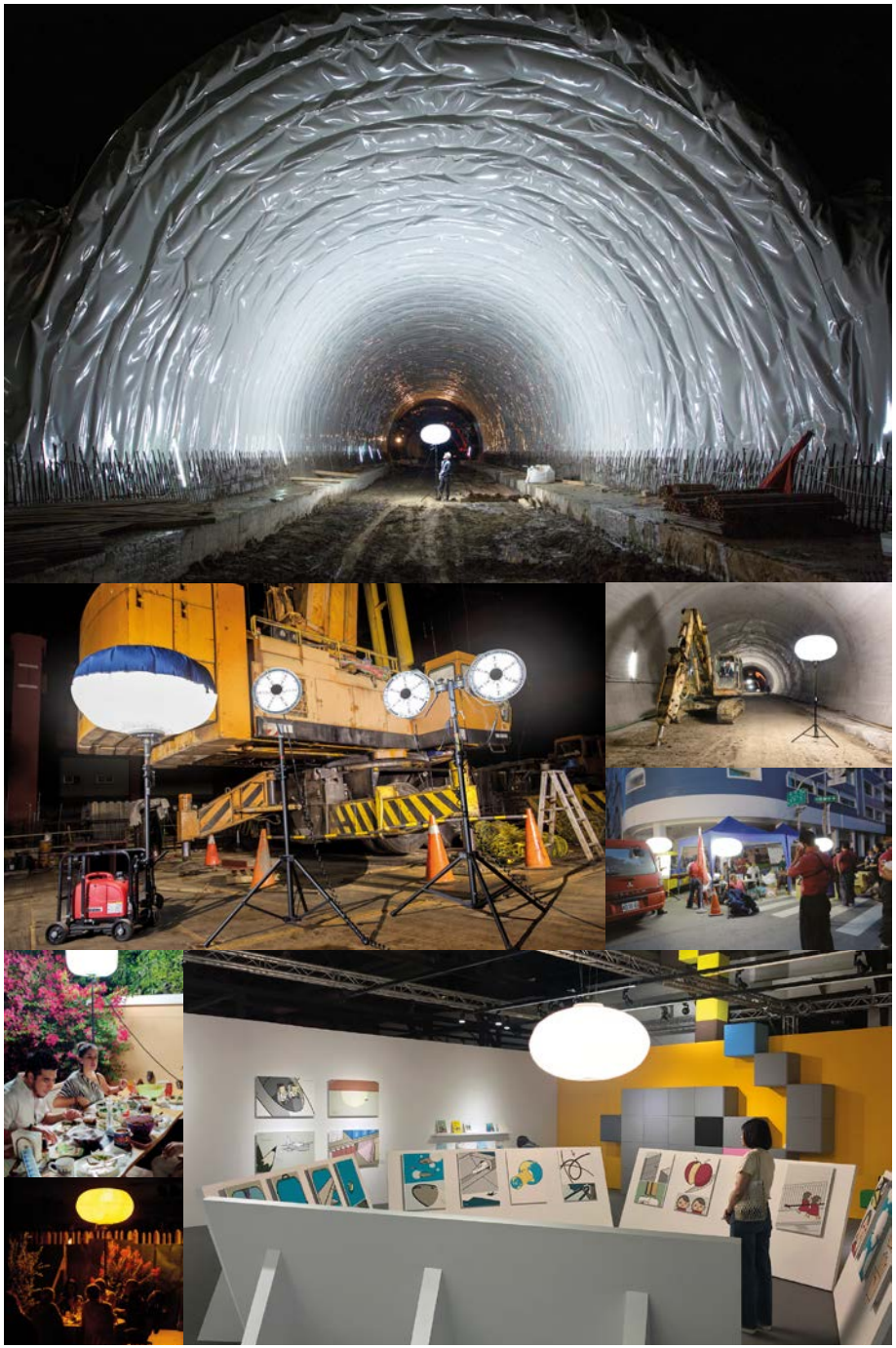

YUANG
LIGHT

www.yuanglight.com
5F, No. 210, Sec. 2, Zhonghua Road,
Tucheng District, 236 New Taipei City, Taiwan
+886 2 2268 0546
+886 2 2268 1907
service@cyuang.com
@yuanglight